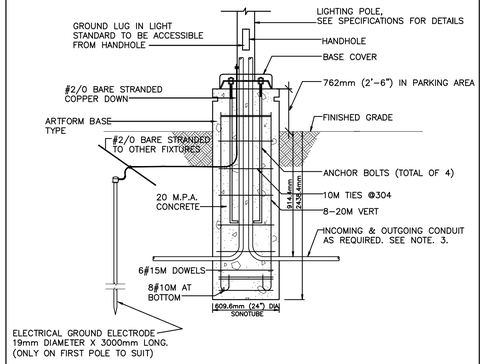

NOTES:

1. PROVIDE ALL WORK ASSOCIATED WITH THIS DETAIL. FINISH TO SUIT ARCHITECT'S REQUIREMENTS. EXACT LOCATION OF POLE MOUNTED LUMINAIRES TO BE COORDINATED WITH ARCHITECTURAL SITE PLAN.
2. REFER TO STRUCTURAL CONSULTANT FOR DETAILS OF BASE. THE BASE SHALL BE PROVIDED BY DIVISION 16 IN ACCORDANCE WITH SHOP DRAWINGS, DETAILS AND COORDINATION WITH GENERAL CONTRACTOR AND DIVISION 3.
3. ELECTRICAL CONTRACTOR TO PROVIDE MINIMUM SIZE OF WIRING 2#10+GND IN 1"C.

1 / E1.03 LIGHTING POLE BASE DETAIL
SCALE: N.T.S.

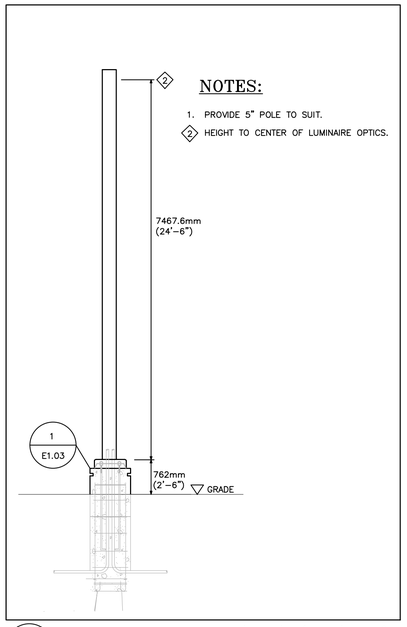

NOTES:

1. PROVIDE 5" POLE TO SUIT.
2. HEIGHT TO CENTER OF LUMINAIRE OPTICS.

2 / E1.03 POLE DETAIL TYPE 'LA2', 'LA3' & 'LA4'
SCALE: N.T.S.

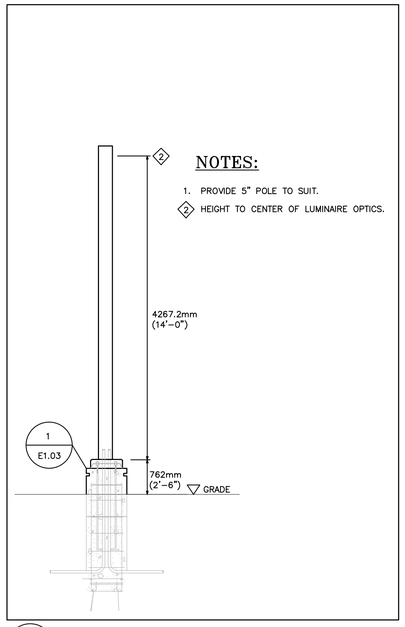

NOTES:

1. PROVIDE 5" POLE TO SUIT.
2. HEIGHT TO CENTER OF LUMINAIRE OPTICS.

3 / E1.03 POLE DETAIL TYPE 'LA1' & 'LA1A'
SCALE: N.T.S.

LUMINAIRE SCHEDULE

SYMBOL	LABEL	ARRANGEMENT	TOTAL LAMP LUMEN	LLF	MANUFACTURER	WATTAGE	MOUNTING HEIGHT
	LC1	SINGLE	1474	0.9	PRESCOLITE LTR-4RD-H-SL15L-DM1-LTR-4RD-T-SL30K8XWS WET LOCATION LENS	18.6	12'-0"
	W1	WALL PACK	1303	0.9	HUBBELL OUTDOOR RWL1-48L-10-3K7-3-U	10.1	6'-0"
	W2	WALL PACK	2569	0.9	HUBBELL OUTDOOR RWL1-48L-20-3K7-4W-U	19.9	18'-0"
	W3	WALL PACK	14403	0.9	HUBBELL OUTDOOR RWL2-160L-115-3K7-4-U	109.8	25'-0"
	W4	WALL PACK	1303	0.9	HUBBELL OUTDOOR RWL1-48L-10-3K7-3-U	10.1	6'-0"
	LA1	POLE MOUNTED	5495	0.8	HUBBELL OUTDOOR ALS1-160L-70-3K7-4W-BC C/W POLE	68.4	16'-6"
	LA1A	POLE MOUNTED	14646	0.8	HUBBELL OUTDOOR ALS1-160L-115-3K7-4W-U-BC C/W POLE AND HOUSE SHEILD	109.7	16'-6"
	LA2	POLE MOUNTED	14646	0.8	HUBBELL OUTDOOR ALS1-160L-115-3K7-2-U C/W 2 HEADS AT 180° AND POLE	219.4	27'-0"
	LA3	POLE MOUNTED	5495	0.8	HUBBELL OUTDOOR ALS1-160L-70-3K7-4W-BC C/W POLE	68.4	27'-0"
	LA4	POLE MOUNTED	3197	0.8	HUBBELL OUTDOOR ALS1-80L-25-3K7-4W-U C/W 4 HEADS AT 90° AND POLE	101.6	27'-0"
	LA5	POLE MOUNTED	10497	0.8	HUBBELL OUTDOOR ALS1-160L-135-3K7-4W-U C/W POLE AND 5'-0" CONCRETE POLE BASE	133.1	27'-0"
	LA5A	POLE MOUNTED	10497	0.8	HUBBELL OUTDOOR ALS1-160L-135-3K7-4W-BC C/W HOUSE SHIELD AND POLE AND 5'-0" CONCRETE POLE BASE	133.1	27'-0"

4 / E1.03 LUMINAIRE SCHEDULE
SCALE: N.T.S.

6 / E1.03 LUMINAIRE TYPE W1, W2 AND W4
SCALE: N.T.S.

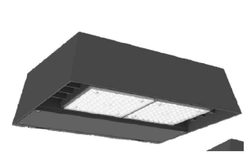

7 / E1.03 LUMINAIRE TYPE W3
SCALE: N.T.S.

8 / E1.03 LUMINAIRE TYPE LC1
SCALE: N.T.S.

STATISTICS

DESCRIPTION	UNITS	AVG	MAX	MIN	MAX/MIN	AVG/MIN
LIGHT TRESSPASS	Fc	0.0	0.2	0.0	N/A	N/A
PARKING	Fc	2.03	6.7	0.5	13.40	4.06
BARRIER FREE PARKING	Fc	3.48	4.0	2.9	1.38	1.20
SIDE WALK	Fc	1.00	2.9	0.5	5.80	2.00

5 / E1.03 CALCULATION SUMMARY
SCALE: N.T.S.

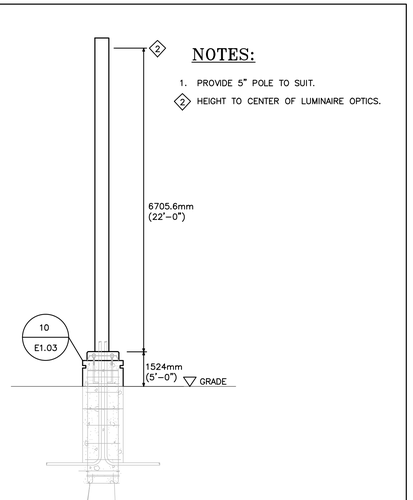

NOTES:

1. PROVIDE 5" POLE TO SUIT.
2. HEIGHT TO CENTER OF LUMINAIRE OPTICS.

9 / E1.03 POLE DETAIL TYPE 'LA5' & 'LA5A'
SCALE: N.T.S.

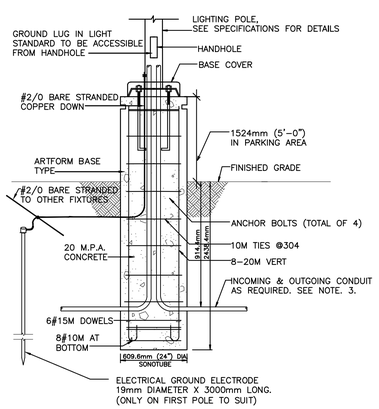

NOTES:

1. PROVIDE ALL WORK ASSOCIATED WITH THIS DETAIL. FINISH TO SUIT ARCHITECT'S REQUIREMENTS. EXACT LOCATION OF POLE MOUNTED LUMINAIRES TO BE COORDINATED WITH ARCHITECTURAL SITE PLAN.
2. REFER TO STRUCTURAL CONSULTANT FOR DETAILS OF BASE. THE BASE SHALL BE PROVIDED BY DIVISION 16 IN ACCORDANCE WITH SHOP DRAWINGS, DETAILS AND COORDINATION WITH GENERAL CONTRACTOR AND DIVISION 3.
3. ELECTRICAL CONTRACTOR TO PROVIDE MINIMUM SIZE OF WIRING 2#10+GND IN 1"C.

10 / E1.03 LIGHTING POLE BASE DETAIL TYPE 'LA5' AND 'LA5A'
SCALE: N.T.S.

11 / E1.03 LUMINAIRE TYPE 'LA1', 'LA1A', 'LA2', 'LA3' 'LA4', 'LA5' & 'LA5A'
SCALE: N.T.S.

CONTRACTOR MUST CHECK AND VERIFY ALL DIMENSIONS AND JOB CONDITIONS BEFORE PROCEEDING WITH WORK

ALL DRAWINGS MAY BE SUBJECT TO CHANGE DUE TO COMMENTS FROM MUNICIPAL DEPARTMENTS AND OTHER AGENCIES WITH AUTHORITY

ALL DRAWINGS AND SPECIFICATIONS ARE THE PROPERTY OF THE ARCHITECTS AND MUST BE RETURNED AT THE COMPLETION OF THE WORK

THE CONTRACTOR WORKING FROM DRAWINGS NOT SPECIFICALLY MARKED "FOR CONSTRUCTION" MUST ASSUME FULL RESPONSIBILITY AND BEAR COSTS FOR ANY CORRECTIONS OR DAMAGES RESULTING FROM HIS OR HER WORK

e-lumen International Inc.
CONSULTING ENGINEERS
LIGHTING - ELECTRICAL
595 CITYVIEW BLVD, SUITE 204/205
VAUGHAN, ON, CANADA L4H 3M7
Tel: (905)417-8861 Fax: (905)417-6882
www.e-lumen.ca

DRAWING SETS ISSUED	No.	DATE (DD.MM.YY)	BY
ZBA SUBMISSION	1.	23.12.21	JM
ZBA 2ND SUBMISSION	2.	29.07.22	JM
PROGRESS SET	3.	20.12.22	JM
ZBA SUBMISSION	4.	01.02.23	JM
	5.		

ALL PREVIOUS ISSUES OF THIS DRAWING ARE SUPERSEDED

REVISIONS TO DRAWING	No.	DATE (DD.MM.YY)	BY

NOT FOR CONSTRUCTION

BUILDING PERMIT NUMBER:
NOT FOR CONSTRUCTION WITHOUT PERMIT

KNYMH
ARCHITECTURE • SOLUTIONS
KNYMH INC.
1006 SKYVIEW DRIVE • SUITE 101
BURLINGTON, ONTARIO • L7P 0V1
T 905.639.6595
F 905.639.0394
www.knymh.com info@knymh.com

LICENSED PROFESSIONAL ENGINEER
01/02/23
F. SANTIA
PROVINCE OF ONTARIO

CERTIFIED ENGINEERING TECHNOLOGIST
OACETT
ONTARIO
GABRIEL G. MOBILIO
Nº 57663

LIMEN (Operating Entity)
SCAL PROPERTIES LTD.
(Property Owner)

LIMEN CONTRACTORS YARD & STORAGE BUILDING

FORTECON DRIVE
STOUFFVILLE, ONTARIO

DRAWING SHEET TITLE:
LIGHTING DETAILS

DRAWING SCALE: N.T.S.
PROJECT NUMBER: 21-174
DRAWN BY: U.A.
CHECKED BY: J.M.
DRAWING VERSION:
PLOT DATE: JULY 27, 2022
DRAWING SHEET NUMBER: E1.03

TIMESTAMP: 2023-0-01 10:03:09 AM FILEPATH: Z:\e-Lumen Electrical Projects\2021\21-174 Limen Fortecon Buildings\Electrical\E1.03 - Site Plan Details.dwg